Isolated, Thermocouple Input

3B37

FEATURES

Interfaces, amplifies, & filters input voltages from a J, K, T, E, R, S, or B-type thermocouple.
High accuracy internal cold junction compensation.
Module provides simultaneous precision voltage and current outputs.
Current output withstands 130V rms without damage.
All 3B37 series modules are mix-and-match and Hot Swappable.

APPLICATIONS

Industrial signal conditioning
Industrial signal isolation
Industrial signal filtering

PRODUCT OVERVIEW

The 3B Series of Signal Conditioning I/o Subsystems provide a low-cost, versatile method of transferring analog transducer signals to a data acquisition, monitoring or control system without the inherent noise, non-linearity, drift and extraneous voltages. The modules are designed to directly accept analog signals from Thermocouples, RTD's, AC and DC Strain Gages, Torque Transducers, Frequency Transducers, LVDTs, millivolt or process current signals. The modules amplify, isolate, linearize and convert the transducer output signals to standardized analog inputs for high-level analog I/O subsystems. The 3B Series Subsystem consists of a 10" relay rack with universal mounting backplane and a family of plug-in (up to 16 per rack) input and output signal conditioning modules.

Eight and four channel backplanes are also available. Each backplane incorporates screw terminals for sensor inputs and current outputs and a 26-pin connector for high-level single-ended voltage outputs to the user's equipment.

The input modules feature complete signal conditioning circuitry optimized for specific sensors or analog signals and provide two simultaneous high-level analog outputs: 0 to +10V (or ±10V) and 4-20 mA (or 0-20 mA).

FUNCTIONAL BLOCK DIAGRAM

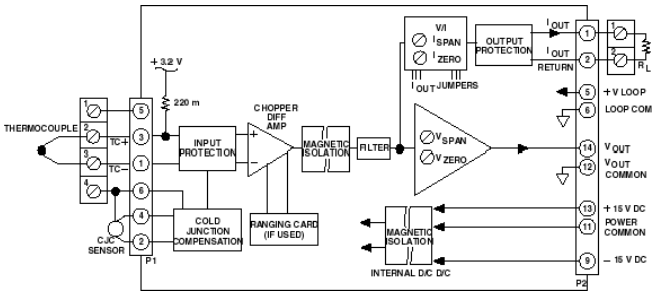

Figure 1. 3B37 Functional Block Diagram

Output modules accept 0 to +10V (or ±10V) single-ended signals and provide an isolated 4-20 mA (or 0-20 mA) process signal. All modules feature a universal pin-out and may be readily hot-swapped under full power and interchanged without disrupting field wiring.

The Analog Devices 3B Series Signal Conditioning Subsystem is designed to easily handle signal conditioning problems in measurement and control applications. Some typical uses are in microcomputer-based data acquisition systems, programmable controllers, analog recorders, dedicated control systems, and any other applications where monitoring of temperature, pressure, flow and analog signals are required. Since each input module features two simultaneous outputs, the voltage output can be used to provide an input to a microprocessor-based data acquisition or control system while the current output can be used for analog transmission, operator interface, or an analog backup system.

Each input module is a single-channel signal conditioner which plugs into a socket on the backplane and accepts its signal from the input screw terminals. All input modules provide input protection, amplification and filtering of the input signal, accuracy of ±0.1%, low drift of ±1 uV/°C (low-level input modules), and feature two high-level analog outputs that are compatible with most process instrumentation. The isolated input modules also provide ±1500 V peak isolation.

The choice of a specific 3B module depends upon the type of input signal. Input modules are available to accept millivolt, volt, process current, thermocouple, RTD, AC and DC strain gage, frequency and LVDT inputs. The voltage output of each module is available from the sysem I/O connector while the current output is available on the output screw terminals.

Rev. 0
Information furnished by Analog Devices is believed to be accurate and reliable. However, no responsibility is assumed by Analog Devices for its use, nor for any infringements of patents or other rights of third parties that may result from its use. Specifications subject to change without notice. No license is granted by implication or otherwise under any patent or patent rights of Analog Devices. Trademarks and registered trademarks are the property of their respective companies.

One Technology Way, P.O. Box 9106, Norwood, MA 02062-9106, U.S.A.
Tel: 781.329.4700 **www.analog.com**
Fax: 781.326.8703 **© 2004 Analog Devices, Inc. All rights reserved.**

GENERAL DESCRIPTION

The 3B37 is a single-channel signal conditioning module that interfaces, amplifies and filters input voltages from a J, K, T, E, R, S or B-type thermocouple and provides isolated simultaneous voltage and current outputs linear with input voltage. High accuracy internal cold junction compensation and a predictable upscale open circuit indication provide a complete signal conditioning solution. To accurately measure low level signals in electrically noisy environments, ±1500 V peak of galvanic transformer-based isolation with a common mode rejection (CMR) of 160 dB @ 50/60 Hz and a normal mode rejection (NMR) of 60 dB @ 50/60 Hz are provided. The current output withstands 130 V rms without damage and interfaces user equipment through screw terminals located on the 3B Series backplane. This plug-in, mix-and-match, hot-swappable module is easily field calibrated via front-panel zero and span adjustments for both voltage and current outputs.

Accurate and System Ready – Internal cold-junction compensation largely corrects errors arising from parasitic thermocouples formed by thermocouple connection to the input screw terminals, providing an accuracy of ±0.5°C over the +5°C to +45°C ambient temperature range. The module generates a predictable upscale signal to indicate an open thermocouple; for a downscale response, connect a 47MΩ, 0.25 Watt resistor across screw terminals 2 and 4 on the 3B Series backplane

3B Series Custom Ranging Program – Externally-programmable version Model 3B37-X-00, enable the user to configure a special input range by using the optional plug-on AC1310 ranging card, which houses user-supplied resistors to determine zero and span. To facilitate selecting resistors, a Windows program, 3B-Custom, calculates resistor values based on the user-desired input/output ranges.

Inside the 3B37 Module – A chopper-stabilized low-drift input amplifier assures stable long-term stability. At the amplifier input, a zero-scale input voltage is subtracted from the input signal to set the zero-scale value. For user convenience, the zero and span optionally can be factory configured to meet custom needs (Model 3B37-CUSTOM) or can be externally programmed (Model 3B37-X-00) via user-supplied resistors inserted in the optional AC1310 plug-on ranging card. Zero suppression can exceed 100% of the input range. This enables suppression of a zero-scale input value amny times larger that the total span for precise expanded-scale measurements of a selection portion of an input signal. The differential input circuit on the field side is fully floating, eliminating the need for any input grounding. Signal isolation by transformer coupling users a proprietary modulation technique for linear, stable and reliable performance. A demodulator on the computer side of the signal transformer recovers the original signa, which is then filtered and buffered to provide a low-noise, low-impedance output voltage, this output also drives a voltage-to-current (V/I) converter to provide a simultaneous current output for interfacing versatility.

Figure 2

3B37 Models Available

Model	Input Type	Input Range	Output Ranges[1]
3B37-X-00	Type J, K, T, E, R, S, or B	Externally Programmable [2]	0 V to +10 V & 0 mA to 20 mA
3B37-J-01	Type J	-100°C to +100°C (-148°F to +1400°F)	0 V to +10 V & 0 mA to 20 mA
3B37-K-02	Type K	-100°C to +1350°C (-148°F to +2462°F)	0 V to +10 V & 0 mA to 20 mA
3B37-T-03	Type T	-100°C to +400°C (-148°F to +752°F)	0 V to +10 V & 0 mA to 20 mA
3B37-E-04	Type E	0°C to +900°C (+32°F to +1652°F)	0 V to +10 V & 0 mA to 20 mA
3B37-R-05	Type R	0°C to +1750°C (+32°F to +3182°F)	0 V to +10 V & 0 mA to 20 mA
3B37-S-05	Type S	0°C to +1750°C (+32°F to +3182°F)	0 V to +10 V & 0 mA to 20 mA
3B37-B-06	Type B	0°C to +1800°C (+32°F to +3272°F)	0 V to +10 V & 0 mA to 20 mA
3B37-Custom	Type J, K, T, E, R, S, or B	*	*

[1] Output current range may be user programmed to 4 mA to 20 mA using jumper supplied.
[2] Requires AC1310 ranging card.
* Custom Input/Output ranges are available. Refer to configuration guide.

3B37 Specifications

(typical @ +25°C and ±15 V dc, and +24 V dc Power)

Description	Model 3B37
Input Ranges	
Standard Ranges	Refer to Model Table
Custom Ranges	±5 mV to ±500 mV
Output Ranges	
Voltage (R_L > 2 KΩ)	0 V to +10 V; -10 V to +10 V
Current (R_L = 0 to 850Ω)[1]	4 mA to 20 mA or 0 mA to 20 mA
Maximum Current Output Span	0 mA to 31 mA
Accuracy[2]	
Initial @ +25°C	±0.1% Span + CJC Sensor Error
Nonlinearity	±0.01% Span
Stability vs. Temperature	
Voltage Output	
Zero	±0.02°C/°C
Span	±25 ppm of Reading/°C
Current Output[3]	
Zero	±25 ppm of Span/°C
Span	±25 ppm of Reading/°C
Zero and Span Adjustment Range[4]	±5% of Span
Cold Junction Compensation (CJC)[5]	
Initial Accuracy @ +25°C	±0.5 °C
Accuracy vs. Temperature, +5°C to +45°C	±0.5°C (±0.0125°C/°C)
Input Bias Current	+15 nA

Input Resistance	15 MΩ
Noise	
Input, 0.1 Hz to 10 Hz Bandwidth	0.2 μV rms
Output, 100 kHz Bandwidth	50 μV rms
Bandwidth, -3 dB	3 Hz
Output Rise Time, 10% to 90% Span	200 ms
Open Input Response	Upscale
Open Input Detection Time	10 seconds
Common-Mode Voltage (CMV)	
Input-to-Output, Continuous	±1500 V peak, maximum
Transient	ANSI/IEEE C37.90.1-1989
Common Mode Rejection (CMR)	
1 kΩ Source Imbalance, 50/60 Hz	160 dB
Normal Mode Rejection, 50/60 Hz	60 dB
Input Protection	
Continuous	220 V rms maximum
Transient	ANSI/IEEE C37.90.1-1989
Voltage Output Protection	Continuous Short to Ground
Current Output Protection	130 V rms, continuous
Power Supply Voltages [6]	
±15 V dc Supplies	
Rated Operation	±(11.5 V dc to 16.5 V dc)
Current	±12 mA
Sensitivity	±0.01% span/V
+24 V dc Loop Supply	
Rated Operation	+12 V dc to +30 V dc
Current	+27 mA @ I_{out} = 20 mA
Sensitivity	±0.0002% span/V
Mechanical Dimensions	3.15" x 3.395" x 0.775" (80.0 mm x 86.2 mm x 19.7 mm)
Environmental	
Temperature Range	
Rated Performance	-25°C to +85°C
Storage	-55°C to +85°C
Relative Humidity, 24 hours	0 to 95% @ +60°C noncondensing
RFI Susceptibility	±0.5% Span error @ 400 MHz, 5 Watt, 3 ft

[1] For a 0 mA to 20 mA range, a typical minimum output current is 10 μA.
[2] Includes the combined effects of repeatability, hysteresis, and nonlinearity.
[3] With respect to the voltage output.
[4] A wide range of custom zero suppression and span is available with the 3B30-00 and 3B31-00 models, using the AC1310 ranging card.
[5] When used with the CJC temperature sensor provided on the 3B Series backplane.
[6] +24 V dc loop power is required for driving the current output at loads up to 850Ω. If a current output load of 400Ω or less is applied, +15 V dc is sufficient for loop power. If only voltage output is used, loop power is not required.

PIN CONFIGURATIONS AND FUNCTIONAL DESCRIPTIONS

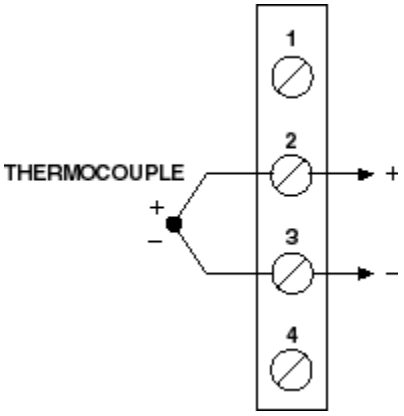

Figure 3 3B37 Input Field Connections

Table 1. Pin Function Descriptions—

Pin No.	Description
1	n/c
2	+
3	-
4	n/c

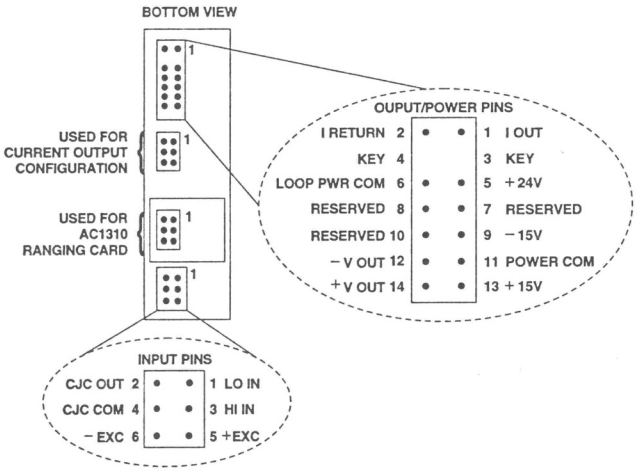

Figure 4 . Model 3B Series Module, with pin-out assignments.

ESD CAUTION

ESD (electrostatic discharge) sensitive device. Electrostatic charges as high as 4000 V readily accumulate on the human body and test equipment and can discharge without detection. Although this product features proprietary ESD protection circuitry, permanent damage may occur on devices subjected to high energy electrostatic discharges. Therefore, proper ESD precautions are recommended to avoid performance degradation or loss of functionality.

OUTLINE DIMENSIONS

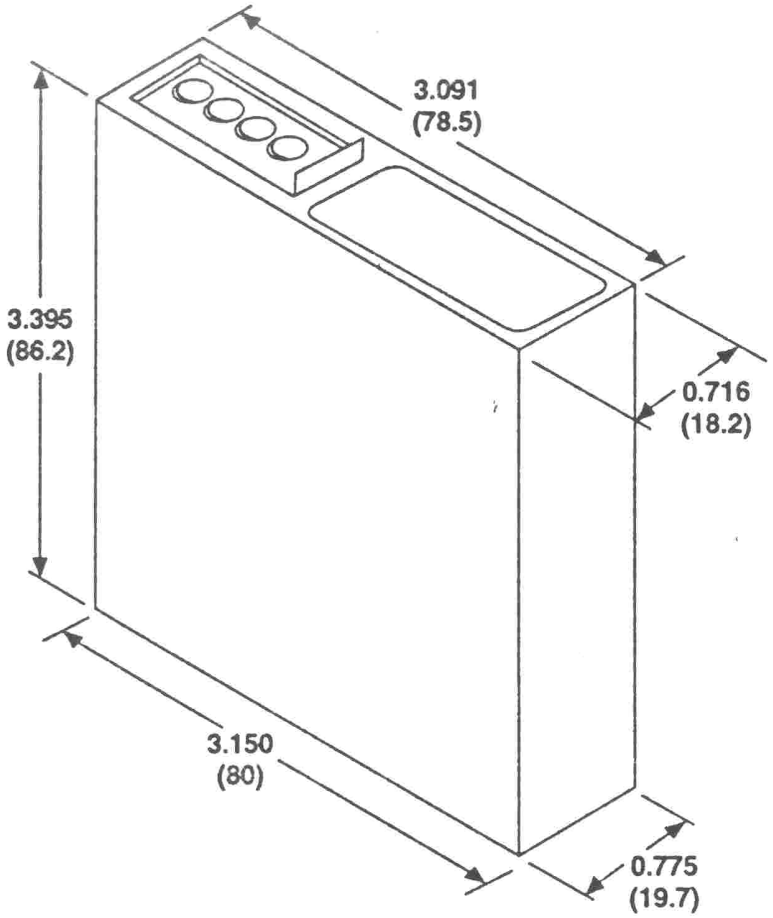

Figure 5. Outline Dimensions

NOTES

NOTES

© 2004 Analog Devices, Inc. All rights reserved. Trademarks and registered trademarks are the property of their respective companies.
D01116-0-9/04(0)